FINAL ENVIRONMENTAL ASSESSMENT

FLOOD CONTROL IMPROVEMENTS TO THE RIO GRANDE CANALIZATION PROJECT

Prepared by:

United States Section, International Boundary and Water Commission

El Paso, Texas

December 2007

COVER SHEET

FINAL ENVIRONMENTAL ASSESSMENT
AND
FINDING OF NO SIGNIFICANT IMPACT

FLOOD CONTROL IMPROVEMENTS TO THE
RIO GRANDE CANALIZATION PROJECT

Lead Agency: United States Section, International Boundary and Water Commission

Proposed Action: Raise approximately 52 miles of levees and construct new flood control structures along the Rio Grande Canalization Project to meet current requirements for flood control.

Report Designation: Environmental Assessment

Abstract: The USIBWC is considering raising sections of the Rio Grande Canalization Project Levee System to meet current flood control requirements. The proposed action would increase the height of the levee up to 4 feet depending on location. Height increases greater than 2 feet would also result in possible expansion of the levee footprint by lateral extension of the structure. In certain locations levee slope adjustments will be implemented, in order to avoid impacts to natural resources. Along sections of the Rio Grande Canalization Project, other flood control improvements including new levee segments, floodwalls, and flow control structures may be required. These improvements and height increases greater than 2 feet will be subject to availability of funds.

The Environmental Assessment assesses potential environmental impacts of the Proposed Action and No Action Alternatives. Potential impacts on natural, cultural, and other resources were evaluated. A Finding of No Significant Impact was issued for the Proposed Action Based on a review of the facts and analyses contained in the Environmental Assessment.

FINDING OF NO SIGNIFICANT IMPACT

FLOOD CONTROL IMPROVEMENTS TO THE RIO GRANDE CANALIZATION PROJECT

LEAD AGENCY: United States Section, International Boundary and Water Commission, United States and Mexico (USIBWC).

BACKGROUND

The Rio Grande Canalization Project was authorized by the Act of June 4, 1936, 49 Stat. 1463, Public Law No. 648 to facilitate compliance with the Convention concluded with Mexico on May 21, 1906, (TS 455), providing for the equitable division of waters of the Rio Grande, and to properly regulate and control the water supply for use in the two countries. The Act authorized the construction, operation, and maintenance of the project in accordance with the plan in the Engineering Report of December 14, 1935.

The USIBWC prepared this Environmental Assessment for the proposed action to improve flood control along sections of the Rio Grande Canalization Project Levee System located in El Paso County, Texas and Doña Ana and Sierra Counties, New Mexico. This levee system extends approximately 105.6 miles along the Rio Grande from Percha Diversion Dam in Sierra County, New Mexico downstream to American Dam in El Paso.

PROPOSED ACTION

The Proposed Action would increase the flood containment capacity of the Rio Grande Canalization Project Levee System by raising the elevation of a number of levee segments for improved flood protection. Fill material, obtained from commercial sources would be added to the existing levee to meet the 3 foot freeboard criterion. Typical height increases in improvement areas would range from 1 to 4 feet. Improvements greater than 2 feet would require expansion of the existing levee footprint. In some locations, up to 4 feet of fill material would be added, extending the levee footprint up to a maximum of 24 feet from the current toe of the levee. This expansion would take place along the approximately 20 foot service corridor currently utilized for levee maintenance, inside the maintained floodway, and entirely within the flood control project right-of-way. In some instances, adjustments in levee slope would be made to eliminate the need for levee footprint expansion, when required by engineering considerations or for protection of resources.

ALTERNATIVES TO THE PROPOSED ACTION

A No Action Alternative was evaluated for the flood control improvements to the Rio Grande Canalization Project Levee System. This alternative would retain the existing configuration of the system, and the level of protection currently associated with this system. Under severe storm events, current containment capacity may be insufficient to fully control Rio Grande flooding, with risks to personal safety and potential property damage.

SUMMARY OF FINDINGS

Pursuant to NEPA guidance (40 Code of Federal Regulations 1500-1508), The President's Council on Environmental Quality issued regulations for NEPA implementation which included provisions for both the content and procedural aspects of the required Environmental Assessment. The USIBWC completed an EA of the potential environmental consequences of raising segments of the Rio Grande Canalization Project Levee System to meet current requirements for flood control. The EA, which supports this Finding of No Significant Impact, evaluated the Proposed Action and No Action Alternative.

LEVEE SYSTEM EVALUATION

NO ACTION ALTERNATIVE

The No Action Alternative was evaluated as the single alternative action to the Proposed Action. The No Action Alternative would retain the current configuration of the Rio Grande Rectification Project Levee System, with no impacts to biological and cultural resources, water resources, land use, community resources, and environmental health issues. In terms of flood protection, however, current containment capacity under the No Action Alternative may be insufficient to fully control Rio Grande flooding under severe storm events, with associated risks to personal safety and property. The USIBWC will not be able to certify the levee system segments, that are being targeted for improvements, as meeting Federal Emergency Management Act (FEMA) requirements.

PROPOSED ACTION

Biological Resources

Improvements to the levee system would entail clearing and placement of fill material on the existing levees. Vegetation would be impacted along the levee slopes and at locations where levee footprint expansion is required (fill greater than 2 feet). Levee expansion, if required, would take place along the current levee service corridor, limiting vegetation removal to low quality invasive plant species along the levee slopes. Avoidance measures would be implemented to protect resources, as needed.

No significant effects are anticipated on wildlife habitat in the vicinity of the levee system, including potential habitat for threatened and endangered species. In areas requiring levee footprint expansion, no riparian woodland communities would be impacted; impacts on vegetation would be limited to low quality vegetation along the levee slopes, of very limited value as wildlife habitat.

Cultural Resources

Improvements to the levee system are not expected to adversely affect known archaeological or historical resources. Typically, placement of fill material over the existing levee would not expand the levee footprint; when levee footprint expansion is needed, expansion would take place within the service corridor currently used for levee maintenance.

Water Resources

Improvements to the levee system would increase flood containment capacity to control the design flood event with a negligible increase in water surface elevation. Levee footprint expansion would not affect water resources.

Land Use

Levee improvements would occur on existing levee structures. Footprint levee expansion, where required, would take place completely within the existing levee footprint, including the existing service corridor, and remain within USIBWC right-of-way (ROW). There is minimal potential for impacts to urban or agricultural lands since the majority of the work will take place on USIBWC ROW. The majority of the existing river trails would not be impacted, except for those segments that have been constructed on top of the levee and are within the areas targeted for improvements.

Community Resources

In terms of socioeconomic resources, the influx of federal funds into El Paso, Doña Ana, and Sierra Counties from the levee improvement project would have a positive but minor local economic impact. No adverse impacts to disproportionately high minority and low-income populations were identified for construction activities. Moderate utilization of public roads is required during construction; a temporary increase in access road use would be required for equipment mobilization and material shipments.

Environmental Health Issues

Improvements to the levee system would have minimal impact to air quality through construction activities. Air emissions during construction would be limited to heavy equipment operation during normal working hours. There would be a moderate increase in ambient noise levels due to construction activities. No long-term and regular exposure is expected above noise threshold values.

Best Management Practices

When warranted due to engineering considerations, or for protection of biological or cultural resources, the need for levee footprint expansion would be eliminated by levee slope adjustment. Best management practices during construction would include use of sediment barriers and soil wetting to minimize erosion and dust. To protect riparian woody vegetation, avoidance measures will be implemented. To protect wildlife, construction activities would be scheduled to occur, to the extent possible, outside the March to August bird migratory season.

DECISION

Based on my review of the facts and analyses contained in the Environmental Assessment, I conclude that implementation of the Proposed Action to improve the Rio Grande Canalization Project Levee System would not have a significant impact. Levee system improvements do not preclude USIBWC support or implementation to regional

initiatives for river trail projects, habitat improvement, and management of natural resources within the floodway. Accordingly, requirements of the National Environmental Policy Act and regulations promulgated by the Council on Environmental Quality are fulfilled and an environmental impact statement is not required.

12/19/07

Carlos Marin, Commissioner
International Boundary and Water Commission,
United States Section

Date

FINAL ENVIRONMENTAL ASSESSMENT
FLOOD CONTROL IMPROVEMENTS TO THE
RIO GRANDE CANALIZATION PROJECT

Prepared by:

UNITED STATES SECTION,
INTERNATIONAL BOUNDARY AND WATER COMMISSION
UNITED STATES AND MEXICO

DECEMBER 2007

CONTENTS

LIST OF TABLES ..... **ii**
ACRONYMS AND ABBREVIATIONS ..... **ii**
SECTION 1 . PURPOSE OF AND NEED FOR THE PROPOSED ACTION **1**
1.1 Introduction 1
1.2 Purpose and Need 1
1.3 Scope of the Environmental Review 1
SECTION 2 . DESCRIPTION OF PROPOSED ACTION **2**
2.1 Levee System Description 2
2.2 Proposed Action 2
2.3 Summary Comparison of Environmental Consequences of the Alternatives 4
SECTION 3 . AFFECTED ENVIRONMENT **5**
3.1 Biological Resources 6
3.1.1 Vegetation 6
3.1.2 Wildlife 6
3.1.3 Threatened and Endangered Species 7
3.2 Cultural Resources 7
3.3 Water Resources 8
3.3.1 Flood Control 8
3.3.2 Water Quality 10
3.4 Land Use 10
3.5 Community Resources 11
3.5.1 Environmental Justice 11
3.6 Environmental Health 12
3.6.1 Air Quality 12
3.6.2 Noise 12
SECTION 4. CUMULATIVE IMPACTS **13**
SECTION 5. MITIGATION MEASURES **13**
SECTION 6. LIST OF CONTRIBUTORS **14**
SECTION 7. REFERENCES **15**

APPENDICES
Appendix A Detailed Maps of Levee Alignment, Right-of-Way and Potential Expansion Area
Appendix B Threatened and Endangered Species List
Appendix C Photolog of Project Area
Appendix D Draft Environmental Assessment Review Comments

LIST OF TABLES

Table 2.1 Summary of Environmental Resources Affected by the Proposed Action and No Action Alternatives. 5
Table 6.1 Preparers of the Environmental Assessment.....14

ACRONYMS AND ABBREVIATIONS

AQCR	air quality control region
BMP	best management practice
BISON	Biota Information System of New Mexico
CWA	Clean Water Act
dB	Decibel
dbA	A-weighted sound level in dBs
EA	environmental assessment
EIS	environmental impact statement
FEMA	Federal Emergency Management Agency
IBWC	International Boundary and Water Commission, United States and Mexico
NAAQS	National Ambient Air Quality Standards
NMGFD	New Mexico Game and Fish Department
NMHPD	New Mexico Historic Preservation Division
NEPA	National Environmental Policy Act
RGCP	Rio Grande Canalization Project
ROW	right-of-way
T&E	threatened and endangered
TARL	Texas Archaeological Research Laboratory
TCEQ	Texas Commission on Environmental Quality
THC	Texas Historical Commission
TPWD	Texas Parks and Wildlife Department
TWC	Texas Workforce Commission
USACE	U.S. Army Corps of Engineers
USDOT	U.S. Department of Transportation
USEPA	U.S. Environmental Protection Agency
USFWS	U.S. Fish and Wildlife Service
USIBWC	United States Section, International Boundary and Water Commission

SECTION 1. PURPOSE OF AND NEED FOR THE PROPOSED ACTION

1.1 INTRODUCTION

Several years ago, the United States Section, International Boundary and Water Commission (USIBWC) identified the need to make major improvements to the flood control features of the Rio Grande Canalization Project (RGCP) while at the same time implementing environmental enhancements. The USIBWC published the final *Environmental Impact Statement (EIS) for River Management Alternatives for the Rio Grande Canalization Project* in August 2004 (USIBWC 2004). The 2004 EIS described the flood control improvements that were identified in coordination with the United States Army Corps of Engineers (USACE), Albuquerque District in 1996. The Record of Decision (ROD) for the EIS is currently on hold because of requests from elected officials and stakeholders to delay its issuance pending resolution of preferred alternative selection concerns. Without the ROD, the Preferred Alternative for management of the Canalization Project cannot be implemented. As per 40 CFR 1502.20, the USIBWC is authorized to tier from existing environmental documents to focus on issues "ripe for decision." The environmental impacts associated with the proposed flood control improvements described in this EA are tiered from the 2004 Final EIS. This will allow the USIBWC to meet the Federal Emergency Management Agency (FEMA) requirements for levee certification within a timely manner.

1.2 PURPOSE AND NEED

The USIBWC prepared this Environmental Assessment (EA) for the proposed action of constructing flood control improvements along approximately 52 miles of the RGCP in El Paso County, Texas, and Doña Ana and Sierra Counties, New Mexico. Flood control improvements were identified in the USIBWC 2004 Final EIS and subsequent hydraulic modeling utilizing FLO-2D (Figure 1). Improvements consist of levee raising, new levee segments, flow control structures, and floodwalls within the RGCP. These improvements are needed in order to meet the USIBWC 100-year design criteria for flood protection while at the same time meeting FEMA levee certification requirements.

1.3 SCOPE OF THE ENVIRONMENTAL REVIEW

Federal agencies are required to take into consideration the environmental consequences of proposed and alternative actions in the decision-making process under the National Environmental Policy Act (NEPA) of 1969, as amended. The USIBWC regulations for implementing NEPA are specified in *Operational Procedures for Implementing Section 102 of the National Environmental Policy Act of 1969, Other Laws Pertaining to Specifics Aspects of the Environment and Applicable Executive Orders* (46 FR 44083, September 2, 1981). These federal regulations establish both the administrative process and substantive scope of the environmental impact evaluation designed to ensure that deciding authorities have a proper understanding of the potential environmental consequences of a contemplated course of action.

This EA identifies and evaluates the potential environmental consequences that may result from implementation of the Proposed Action and No Action alternative. The following resource areas are analyzed for potential environmental consequences: biological resources; cultural resources;

water resources; land use; and community resources (socioeconomics, environmental justice, and transportation). Environmental health issues are also evaluated (air quality, noise). Resource areas were discussed in the 2004 EIS and are incorporated herein by reference (USIBWC 2004).

Analyses of environmental resources for the affected environment and environmental consequences are based on a potential impact corridor adjacent to the existing levee system. Analyses of environmental consequences also include potential indirect impacts to the levee corridor and the region depending on the resource and its relationship to the proposed action and alternatives. Reference values for air quality, cultural resources, socioeconomics, and environmental justice are evaluated on a regional basis (county level).

SECTION 2. DESCRIPTION OF PROPOSED ACTION

2.1 LEVEE SYSTEM DESCRIPTION

The USIBWC proposes to conduct flood control improvements along approximately 52-miles of east and west levees within the Rio Grande Canalization Project (RGCP). The RGCP consists of a narrow river corridor that extends 105.4 miles along the Rio Grande, from below Percha Dam in Sierra County, New Mexico to American Dam in El Paso, Texas. The RGCP, operated and maintained by the USIBWC since its completion in 1943, was constructed to facilitate water deliveries to the Rincon and Mesilla Valleys in New Mexico, El Paso Valley in Texas, and Juárez Valley in Mexico, and provide flood control. A levee system for flood control extends 57 and 74 miles over the west and east sides of the Rio Grande, respectively. For more detailed information and project description please view the 2004 EIS (USIBWC 2004).

2.2 PROPOSED ACTION

The Proposed Action would increase flood containment capacity of the RGCP levee system by raising the elevation of a number of east and west levee segments. Fill material would be added to the existing levees to bring the height to the 3-foot freeboard design criterion for flood protection. Fill material would be obtained from commercial sources to eliminate the need for excavation within the floodplain or USIBWC properties. The fill material would consist of impervious materials classified in accordance with ASTM International Standards, ASTM D 2487 as lean clay (CL), low plasticity silt (ML), sand containing more than 30 percent of clay (SC), and borderline clay and silt (CL-ML).

Typical height increases needed in the improvement areas range from 1 foot up to 4 feet. Improvements greater than 2 feet in height may extend the existing levee footprint. Improvements greater than 2 feet in height will be subject to availability of funds. The maximum levee height increase of 4 feet will extend the levee footprint up to a maximum of 24 feet from the current toe of the levee. The footprint expansion, centered or offset, will be dictated by the existing USIBWC ROW. Some locations may require construction of new levee segments including floodwalls where USIBWC ROW is limited. Adjustments in levee slopes may be implemented on a case by case basis to minimize impacts in expansion areas.

Centered expansion is the preferred method of levee expansion within the existing ROW as shown in the diagram below.

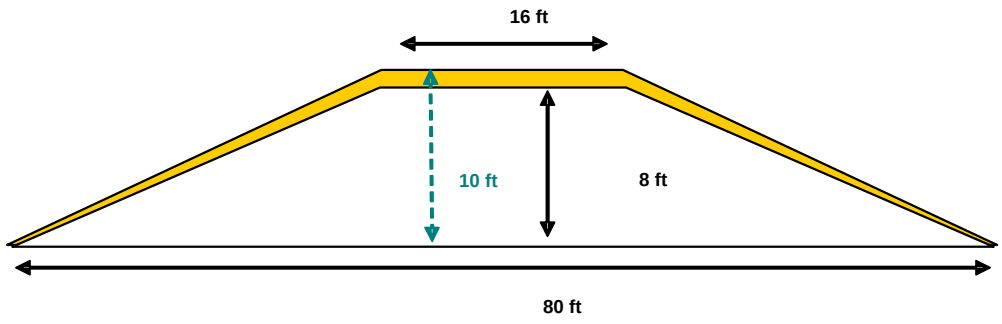

In some locations, where ROW is limited, the placement of fill material could potentially extend the levee footprint to either the landside or riverside. For a typical levee cross-section with limited ROW on the landside, shown in the diagram below, a 2-foot increase in levee height would result in a maximum 12-foot increase in the footprint toward the riverside. The need for excavation outside the levee structure is not anticipated.

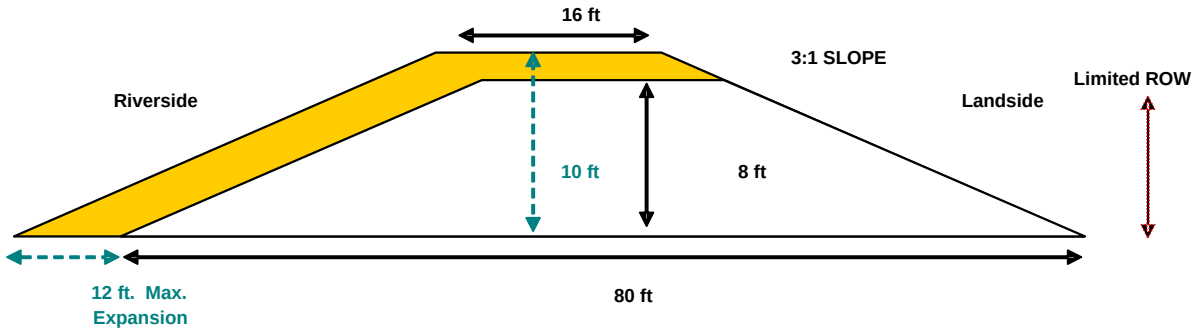

Levee system improvements have been divided into 3 Phases. Distance calculations include both the east and west levees, as indicated below:

Phase 1 Flood Control Improvements in New Mexico

- Mesilla Valley, New Mexico – Raise 11.55 miles of existing levee, ranging from 1 to 2 feet, beginning near Doña Ana downstream to Mesilla Dam.
- Vado, New Mexico - Raise 16.10 miles of existing levee, ranging from 1 to 2 feet, beginning at the Vado Bridge (NM Hwy 189) downstream to the Texas-New Mexico

state line (note: the Rio Grande meanders back and forth across the Texas-New Mexico state line, proposed work is calculated within New Mexico only).

- Hatch/Tonuco, New Mexico – Raise 10.48 miles of existing levee, ranging from 1 to 4 feet, beginning at the Sierra/Doña Ana County line downstream to the Tonuco foot bridge area. Work in this area is subject to availability of funds.

Phase 2 Flood Control Improvements in Texas

- Upper Valley Area – Raise 13.10 miles of existing levee, ranging from 1 to 4 feet, in the area upstream from American Dam to the New Mexico State Line (note: the Rio Grande meanders across the Texas-New Mexico state line at several locations, proposed mileage is calculated within Texas only). Phase 2 work is subject to availability of funds.

Phase 3 Flood Control Improvements in Texas

- Canutillo Area – No USIBWC levee exists along the east bank of the river in this area. The Burlington Northern Santa-Fe Railroad embankment is currently serving as the flood containment structure. The USIBWC proposes to construct a new flood control structure approximately 5.8 miles on the east bank of the river beginning at the Borderland Bridge to upstream of the Vinton Bridge. This work is subject to availability of funds.
- American Dam to Courchesne Bridge – No USIBWC levee exists along the east bank of the river. The USIBWC proposes to construct a new flood control structure for approximately 1.5 miles on the east bank of the Rio Grande beginning near the Brickplant bridge, upstream to the Courchesne Bridge. This work is subject to availability of funds.

2.3 SUMMARY COMPARISON OF ENVIRONMENTAL CONSEQUENCES OF THE ALTERNATIVES

No Action Alternative

The No Action Alternative would retain the current configuration of the levee system with no impacts to biological and cultural resources, land use, community resources, or environmental health issues. In terms of flood protection, however, current containment capacity under the No Action Alternative may be insufficient to fully control Rio Grande flooding under severe storm events, with associated risks to personal safety and property. The USIBWC would not be able to certify its levee system, and FEMA flood rate insurance maps would show no levee system for the project area. Residents within a non-certified levee system will be required to purchase flood insurance if the home has an existing mortgage. Residents who own their homes will be advised to purchase flood insurance.

Proposed Action

The primary focus of the proposed action is to address known or potential flood control deficiencies in the RGCP. Key features of the proposed action include: improving the containment capacity of the existing levees by adding fill material at known locations; and constructing new flood control features in the Canutillo and Anapra areas. Table 2.1 summarizes potential environmental consequences of the proposed improvements. The proposed action would provide improved flood protection along the RGCP.

Table 2.1 Summary of Environmental Resources Affected by the Proposed Action and No Action Alternatives.

ENVIRONMENTAL RESOURCES	EFFECTS OF PROPOSED ACTION	EFFECTS OF NO ACTION ALTERNATIVE
Biological Resources		
A. Vegetation	Not Significantly Affected	Not Affected
B. Wildlife	Not Significantly Affected	Not Affected
C. Threatened and Endangered Species	Not Significantly Affected	Not Affected
Cultural Resources		
A. Archaeological and Historic Resources	Not Affected	Not Affected
Water Resources		
A. Flood Control	Affected Positively	Adversely Affected
B. Water Quality	Not Affected	Not Affected
Land Use		
A. Levee Corridor	Affected positively and adversely*	Affected
Community Resources		
A. Environmental Justice	Affected Positively	Affected
Environmental Health		
A. Air Quality	Temporarily Affected	Not Affected
B. Noise	Temporarily Affected	Not Affected

* Affected in cases where levee footprint expansion and additional right-of-way may need to be acquired. Adjustments in levee slopes will be implemented to minimize impacts to resources in expansion areas.

SECTION 3. AFFECTED ENVIRONMENT

This section describes resources in the potential area of influence of the project. For more detailed information please refer to the USIBWC 2004 EIS. Only those components of the environment that potentially could be affected by the project are discussed. The consequences of

the proposed Action and No Action are discussed immediately after the description of each resource component.

3.1 BIOLOGICAL RESOURCES

3.1.1 Vegetation

The RGCP is located in the northern Trans-Pecos region of the Chihuahuan Desert. This region includes all sections of the Chihuahuan Desert in the U.S. and the northernmost sections of the desert of Mexico (McMahan 1984). Climatic conditions throughout the study area are classified as semi-arid continental, characterized by fairly hot summers, mild winters, and short temperate spring and fall seasons. Precipitation averages 7.7 inches per year (Parsons 2001). The Trans-Pecos region of the Chihuahuan Desert is historically a mosaic of grasslands and desert shrublands (McMahan 1984). Most of the project area, adjacent to the levees, consists of mixed grass-forblands. The levee system grasses are mowed regularly to ensure suitable design flood features.

The levees are raised trapezoidal compacted-earth structures, with a crown width of 16 to 20 feet, an average height of 7.2 feet, and side slopes of 3:1 on the riverside and 2.5:1 on the landside. The levee slopes are typically vegetated by Bermuda grass, Russian thistle, Kochia, silverleaf nightshade, and London rocket. The levee slopes are frequently mowed to prevent the encroachment of woody plants onto the levee slopes and degrade the structural integrity of the levee.

No Action Alternative

No impacts are anticipated, as the current levee configuration would be retained.

Proposed Action

Improvements to the levee corridor would affect plant communities in the immediate areas through clearing, excavation and fill activities. The impacts would occur on the levee slope where fill would be added, and in some instances within the expanded levee footprint area at the toe of the existing levee. The vegetation communities impacted along the levee slopes are primarily low quality plants dominated by invasive plants including Bermuda grass, Russian thistle, Kochia, Silverleaf nightshade, and London rocket. Short-term impact on vegetation communities along the system corridor would occur. Impacts to woody riparian vegetation are not anticipated as fill material would be added to the existing top of the levee.

3.1.2 Wildlife

Typical wildlife that could inhabit the project area include black-tailed jackrabbit, desert cottontail, cotton rat, ground squirrels, mourning dove, meadowlark, kestrel, red-tail hawk, mule deer, skunks, burrowing owls, several species of waterfowl, and other non-game animals. For more detailed information please review the 2004 EIS documentation.

No Action Alternative

No impacts are anticipated, as the current levee configuration would be retained.

Proposed Action

A minimal loss of habitat for wildlife would occur under the Proposed Action. Project activities along the levee corridor would remove some habitat, however the removal is limited to the levee slopes and crown. Work will be scheduled to occur outside of the bird breeding season which is generally March through August. If work continues into the bird breeding season the areas proposed for disturbance will be surveyed in order to avoid the inadvertent destruction of nests and eggs.

3.1.3 Threatened and Endangered Species

In preparation of the 2004 EIS, biological surveys were conducted along the RGCP. A Biological Assessment was prepared to identify T&E species potentially occurring within the RGCP (Parsons 2001).

Within the RGCP most suitable habitat is located in areas adjacent to, but outside, the USIBWC Right-of-way (ROW), such as Seldon Canyon (southwestern willow flycatcher) and on state property near Leasburg Dam. Sandbars and beaches along the river, more of which become exposed during periods of low flow, provide small amounts of habitat for waterfowl and the interior least tern. Appendix B, lists threatened and endangered species potentially occurring in El Paso County, Texas and Sierra and Doña Ana Counties, New Mexico. Of the species listed potential suitable habitat exists within the RGCP for the interior least tern, southwestern willow flycatcher, and whooping crane.

No Action Alternative

No impacts are anticipated, as the current levee configuration would be retained.

Proposed Action

No T&E species within the levee corridor would be adversely affected by levee raising activities. All work will occur on the existing levee footprint corridor. The herbaceous plant communities present along the levee corridor are dominated by invasive plants and grasses and provides little suitable habitat for T&E species. T&E species potentially occurring will not be impacted during the levee raising activities as potential habitat is located within the river channel away from the levee corridor. Work will be planned to occur outside of the bird nesting season which is typically from March through August. If work continues into the bird breeding season the areas proposed for disturbance will be surveyed in order to avoid the inadvertent destruction of nests and eggs.

3.2 CULTURAL RESOURCES

As part of the 2004 EIS, cultural resource information was collected through a records search and literature review, field reconnaissance and location verification, and consultations with Native American Tribes (Ecosystem Management Inc. 2001). A 2-mile wide corridor that extends for 105.6 miles of the Rio Grande from Percha Dam to American Dam (one mile each side of the river centerline) was defined as the cultural resources study area for the records search. No historic buildings or structures, other than bridges and facilities associated with irrigation facilities, were identified in the Ecosystem Management Inc. (EMI) 2001 report.

Archaeolgical prehistoric and historic resources review identified 186 sites. Of the 186 sites EMI determined that 9 of the sites are or may be within the USIBWC ROW and include 7 prehistoric sites and two multi-component sites.

No Action Alternative

No adverse affects are anticipated, as the current levee configuration would be retained**.**

Proposed Action

Proposed improvements to levee system would occur entirely on the existing levee footprint. The levee footprint corridor has been previously impacted during original levee construction. Impacts to archaeological and historic properties are not anticipated.

3.3 WATER RESOURCES

3.3.1 Flood Control

The RGCP flood control system was designed to provide protection from a storm of large magnitude with a very low probability of occurrence, the 100-year storm. The flood control levees extend for 57 miles along the west side of the RGCP and 74 miles on the east side, for a combined total of 131 miles. Naturally elevated bluffs and canyon walls contain flood flows along portions of the RGCP that do not have levees. The levees range in height from about 3 feet to about 8 feet and have slopes of about 3:1 (length to width) on the river side and 2.5:1 on the "land" side. The levees have a gravel maintenance road along the top. The levees are positioned on average about 750 to 800 feet apart north of Mesilla Dam and 600 feet apart south of Mesilla Dam. The floodway between the levees is generally level or uniformly sloped toward the channel. The floodway contains mostly grasses, some shrubs, and widely scattered trees. The bank of the channel at the immediate edge of the floodway is typically vegetated with a narrow strip of brush and trees. Levees were originally built to provide 3 feet of freeboard during the design flood.

No Action Alternative

The No Action Alternative would retain the current configuration of the levee and maintain the deficient level of protection currently associated with this system. Under severe storm events, containment capacity may be insufficient to fully control Rio Grande flooding with risks to personal safety and property. The risk of levee overtopping would remain elevated for those areas identified by the FLO-2D hydraulic model.

Proposed Action

Improvements to the levee system would increase flood containment capacity to control the design flood event. The improvements would allow the USIBWC to certify the levee segment and meet FEMA requirements.

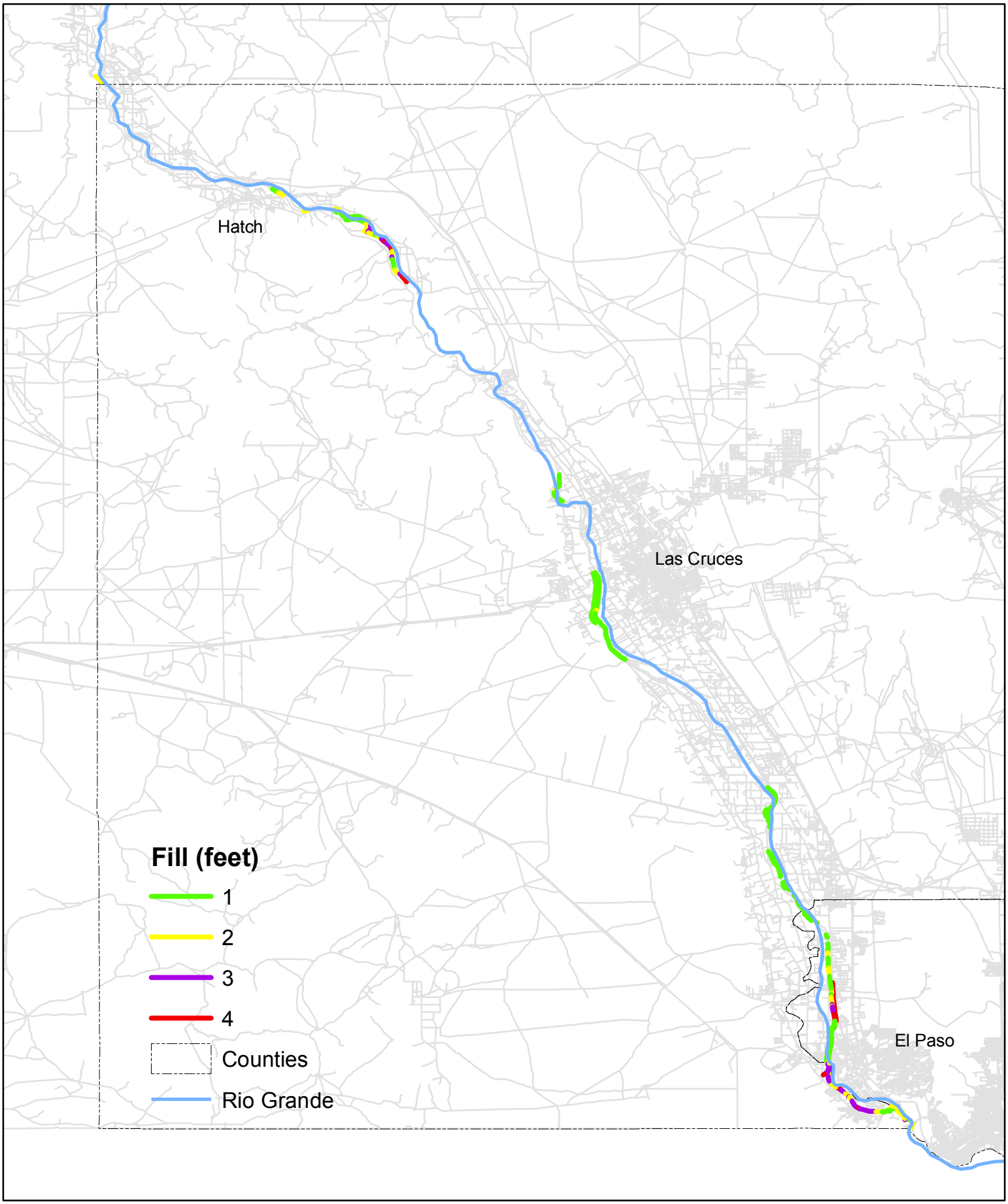

0 2.5 5 10 15 20 Miles

0 5 10 20 30 40 Kilometers

N W E S

Project Location Map
Levee Deficiencies

United States Section,
International Boundary and Water Commission
September 2007

3.3.2 Water Quality

Water quality along the RGCP is defined by New Mexico and Texas on the basis of individual reaches for which designated uses have been defined. On a yearly basis both states submit to the USEPA a 303b surface water quality report that provides a summary for each reach, use attainment, and identifies any potential concerns in terms of water quality.

State of New Mexico. The RGCP segment in New Mexico is contained entirely within Water Quality Standard Assessment Unit 20.6.4.101, that covers a 107-mile mainstem reach of the Rio Grande, from Percha Dam to the Texas border. In June 2007, USEPA approved a TMDL for Bacteria within the main stem of the Rio Grande from the international boundary with Mexico to Elephant Butte Dam. State designated uses for the RGCP reach include (NMED 2007, www.nmcpr.state.nm.us/nmac/parts/title20/20.006.0004.pdf): Irrigation; Marginal warmwater aquatic life; Livestock watering; Wildlife habitat; and Secondary Contact.

State of Texas. The Texas reach of the RGCP is contained in Segment 2314 of the Rio Grande Basin. The 21-mile segment is located in El Paso County and covers from International Dam to the New Mexico State line. For 2007, the USIBWC, Texas Clean Rivers Program reported impairments for contact recreation due to bacterial values exceeding the water quality standards (USIBWC 2007, http://www.ibwc.state.gov/CRP/BHR2007final.pdf). Segment 2314 has the following designated uses: High aquatic life; Public water supply; Fish consumption; and Contact recreation.

No Action Alternative

No impacts are anticipated, as the current levee configuration would be retained.

Proposed Action

No impacts are anticipated because levee height increases would occur within the existing levee footprint and away from the Rio Grande channel. In special instances where jurisdictional waters and or wetlands may be present adjacent to the levee, avoidance measures and best management practices will be implemented to avoid impacts to water quality. Implementation of BMP's would reduce or eliminate erosion and downstream sedimentation and the consequential effects to water quality.

3.4 LAND USE

Current land use adjacent to the RGCP levee system corridor consists primarily of agriculture (farmlands, orchards, livestock). Some urban centers of commerce and residential areas are predominant in the El Paso and Las Cruces regions. The majority of the USIBWC levee system corridor is off limits for public use, with the exception of hike and bike trails, state parks, and other uses from local traffic for accessing farms and residential facilities at specific locations. Existing recreational areas including hike and bike trails will not be impacted. Levee system improvements will not preclude construction of additional hike and bike trails that are currently being planned along the Rio Grande Canalization Project.

No Action Alternative

No impacts are anticipated as the current levee configuration would be retained.

Proposed Action

Levee height increases would occur within the existing levee footprint and entirely within the USIBWC ROW. The proposed action consists of removing approximately 6-inches of flex-base material from the levee crown, and adding the required amount of fill to meet the 3-foot freeboard design. The levee crown is then capped with 6 inches of flex-base material. Levee footprint expansion, if necessary, would primarily occur on the riverside or landside as dictated by the presence of infrastructure constraints. Minor impacts may occur to existing trail heads on top of the levee in those areas that are targeted for additional fill material. In special circumstances such as the Canutillo and Anapra area (downstream of the Courchesne Bridge), current infrastructure and ROW constraints will require additional coordination and engineering to facilitate flood control improvements. The 1996 USACE study recommended a floodwall along the Canutillo reach. The USIBWC is currently exploring construction and design alternatives to address the levee deficiencies in this area. Improvements greater than 2 feet in height and along the Canutillo and Anapra areas are subject to availability of funds.

3.5 COMMUNITY RESOURCES

3.5.1 Environmental Justice

Executive Order 12898, *Federal Actions to Address Environmental Justice in Minority Populations and Low-Income Populations*, was issued by the President on February 11, 1994. The Executive Order requires a federal agency to make "…achieving environmental justice part of its mission by identifying and addressing, as appropriate, disproportionately high and adverse human health or environmental effects of its programs, policies, and activities on minority populations and low-income populations." As such, a proposed action must be evaluated in terms of an adverse effect that:

- Is predominantly borne by a minority population and/or low-income population; or
- Would be suffered by the minority population and/or low-income population and is appreciably more severe or greater in magnitude than the adverse effect that will be suffered by the non-minority population and/or non-low income population.

No Action Alternative

Negative adverse impacts are anticipated as the current levee configuration would be retained, and potential for levee overtopping and flooding nearby areas would remain. FEMA will require flood insurance for residents located in flood zones where RGCP levee certification cannot occur.

Proposed Action

Levee height increases would occur within the existing levee footprint and entirely within the USIBWC ROW. Positive impacts are anticipated as a result of the levee rehabilitation effort. The RGCP levee system would meet the design criteria for flood protection, and the USIBWC would be able to certify its levees as required by FEMA. Although temporary in nature, the direct influx of federal funds into El Paso, Doña Ana and Sierra Counties would be a positive impact on local businesses.

3.6 ENVIRONMENTAL HEALTH

3.6.1 Air Quality

The Clean Air Act, Title 42, Section 7407 of the U.S. Code, states that Air Quality Control Regions (AQCR) shall be designated in interstate and major intrastate areas as deemed necessary or appropriate by a federal administrator for attainment and maintenance of concentration-based standards called National Ambient Air Quality Standards (NAAQS). The RGCP levee transgresses through AQCR 153. This AQCR includes Doña Ana, Lincoln, Sierra, and Otero Counties in New Mexico, and Brewster, Culbertson, El Paso, Hudspeth, Jeff Davis, and Presidio Counties in Texas.

The USEPA designated air quality within all counties of AQCR 153 to be under attainment status for all criteria pollutants, with the exception of Doña Ana and El Paso Counties (USEPA 2007). El Paso County is designated nonattainment, classification moderate, for Carbon Monoxide (CO) and Particulate Matter (PM10) (TCEQ, 2007). Doña Ana County presently has two nonattainment areas: Anthony for PM10; and a 42 square-mile region in the southeast corner of Doña Ana County a marginal nonattainment area for the 1-hour ozone standard (NMED 2007). The General Conformity Rule applies to areas that have been designated as a non-attainment zone for an air pollutant. Federal actions may be exempt from further conformity analysis, if emissions from the action do not exceed *de minimis* thresholds, and if the Federal action is not considered a regionally significant action.

No Action Alternative

No impacts are anticipated, as the current configuration of the levee system would be retained.

Proposed Action

Improvements to the RGCP would have minimal impact to air quality through excavation and fill activities. Potential impacts would be temporary with a slight increase in criteria air pollutants within the project corridor from disturbed soils and from minor construction equipment emissions. The temporary nature and use of best management practices, such as soil wetting for dust suppression and proper maintenance of equipment, would result minimal impacts to the annual emissions inventory.

3.6.2 Noise

Noise is defined as sound that is undesirable because it interferes with speech and hearing, is intense enough to damage hearing, or is otherwise annoying (USDOT 1980). Typical outdoor noise sources near the project corridor include highways, local streets, residential and commercial areas. Noise sources from heavy equipment at typical construction sites range from 84 to 96 dba (CERL 1978).

No Action Alternative

No impacts from noise are anticipated, as the current levee configuration would be retained.

Proposed Action

Improvements to RGCP levee system would increase ambient noise levels through the use of trucks to bring additional fill material to the site and fill activities associated with the levee improvement project. Construction noise would be limited to the immediate construction zone. It is anticipated that construction activities would occur between 7:30 a.m. and 5:00 p.m., 5 days per week for the duration of the project.

SECTION 4. CUMULATIVE IMPACTS

The USIBWC is participating in a collaborative effort with project stakeholders: Elephant Butte Irrigation District, World Wildlife Fund, Environmental Defense, and others to develop alternatives for environmental enhancements that would be implemented following the issuance of the Record of Decision for the Rio Grande Canalization Project Environmental Impact Statement.

Immediately downstream of the Canalization Project is the Rio Grande Rectification Project, which covers 86 river miles along the international boundary from El Paso, TX – Ciudad Juarez, Chihuahua to Fort Quitman, Texas. The International Boundary and Water Commission, United States and Mexico (IBWC), constructed the Rectification Project in the 1930s to stabilize the international boundary and provide flood protection for both countries. The Project includes flood control levees in both the United States and Mexico. The USIBWC in August 2007 released a Draft Programmatic Environmental Impact Statement for the Rectification Project and other Rio Grande flood control projects in Texas.

The City of Sunland Park is proposing to construct, an approximate 5-mile, pedestrian and bicycle trail along the east side of the Rio Grande from Country Club Bridge to Anapra Bridge. The proposed project requires the use of USIBWC property and a license or permit will be required from the USIBWC. The project is currently in the developmental stages and specific engineering designs/profiles have not been submitted for review by the USIBWC.

The New Mexico State Parks has indicated that they will issue a Request for Proposals in the near term for a proposed trail alignment of the Rio Grande Trail System. This work will focus on the southern part of the state from Belen downstream to the Texas state line. New Mexico State Parks will also establish a coordinating council comprised of land managers and stakeholders. Local work groups will be convened to develop criteria for trails. Generally, the Rio Grande trail concept is a multi-use trail for hiking and biking and equestrian when feasible. Width and trail materials will vary. Multi-use trails could use natural surfaces for equestrian, and an adjoining but separate more stable surface for other users. If the proposed project requires the use of USIBWC property, a license or permit will be required from the USIBWC.

SECTION 5. MITIGATION MEASURES

The proposed action would not cause any significant, adverse, environmental impacts. The USIBWC will implement best management practices (BMP) during construction to minimize

impacts to natural resources. Best management practices will include but are not limited to soil wetting for dust suppression; avoidance measures of native woody riparian vegetation; and adjustments in levee slopes to minimize impacts to resources in expansion areas.

SECTION 6. LIST OF CONTRIBUTORS

Table 6.1 Preparers of the Environmental Assessment

Name	Agency	Degree	Years Experience
Gilbert G. Anaya	USIBWC Environmental Protection Specialist	M.S. Environmental Science	17
Wayne Belzer	Environmental Protection Specialist	M.S. Geophysics	17
Daniel Borunda	USIBWC Environmental Protection Specialist	M.S. Fisheries and Wildlife Science	12
Rong Kuo	USIBWC Engineering Services Division	Ph.D. Civil Engineering	23
Antonio Solo	USIBWC, Upper Rio Grande Projects, Project Manager	Civil Engineering	35
Elizabeth Verdecchia	Environmental Protection Assistant	B.A. Environmental Science and Engineering	4

SECTION 7. REFERENCES

BISON 2007. Species Reports. [http://www.bison-m.org/ - accessed September 2007]

McMahan, Craig A., Roy G. Frye, and Kirby L. Brown, 1984, The Vegetation Types of Texas, Texas Parks and Wildlife Department Website, [http://www.tpwd.state.tx.us/gis/veg/index.htm, accessed March 2007]

NMED 2007. Air Quality Bureau. Doña Ana County NM [http://www.nmenv.state.nm.us/aqb/control_strat/sip/dona_ana_county_new_mexico.html – accessed September 2007]

Parsons, 2001, Threatened and Endangered Species Report, Rio Grande Canalization Project.

TCEQ 2007. Point Source Emissions Inventory by County, Texas Commission on Environmental Quality. [http://www.tceq.state.tx.us/nav/data/aq_data.html – accessed March 2007]

TPWD 2007. Threatened and Endangered Species Annotated County

Texas Workforce Commission 2007. El Paso County, Employment Statistics, Texas Workforce Commission website [http://www.twc.state.tx.us/customers/bemp/bempsub4.html – accessed March 2007]

List [http://www.tpwd.state.tx.us/landwater/land/maps/gis/ris/endangered_species.html, accessed September 2007]

USACE 1996. Rio Grande Canalization Improvement Project. Prepared for the U.S. International Boundary and Water Commission, U.S. and Mexico. U.S. Army Corps of Engineers, Albuquerque District.

USDOT 1980. Guidelines for Considering Noise in Land Use. Planning and Control. United States Department of Transportation, Federal Interagency Committee on Urban Noise.

USEPA 2007. Emissions by Category Report - Criteria Air Pollutants El Paso County Texas – 2007. [http://www.epa.gov/air/data/index.html, accessed September 2007]

USIBWC 2004. Final Environmental Impact Statement – River Management Alternatives for the Rio Grande Canalization Project. Document prepared by Parsons for the USIBWC, August 2004.